WIRING DIAGRAM

10. Wiring system

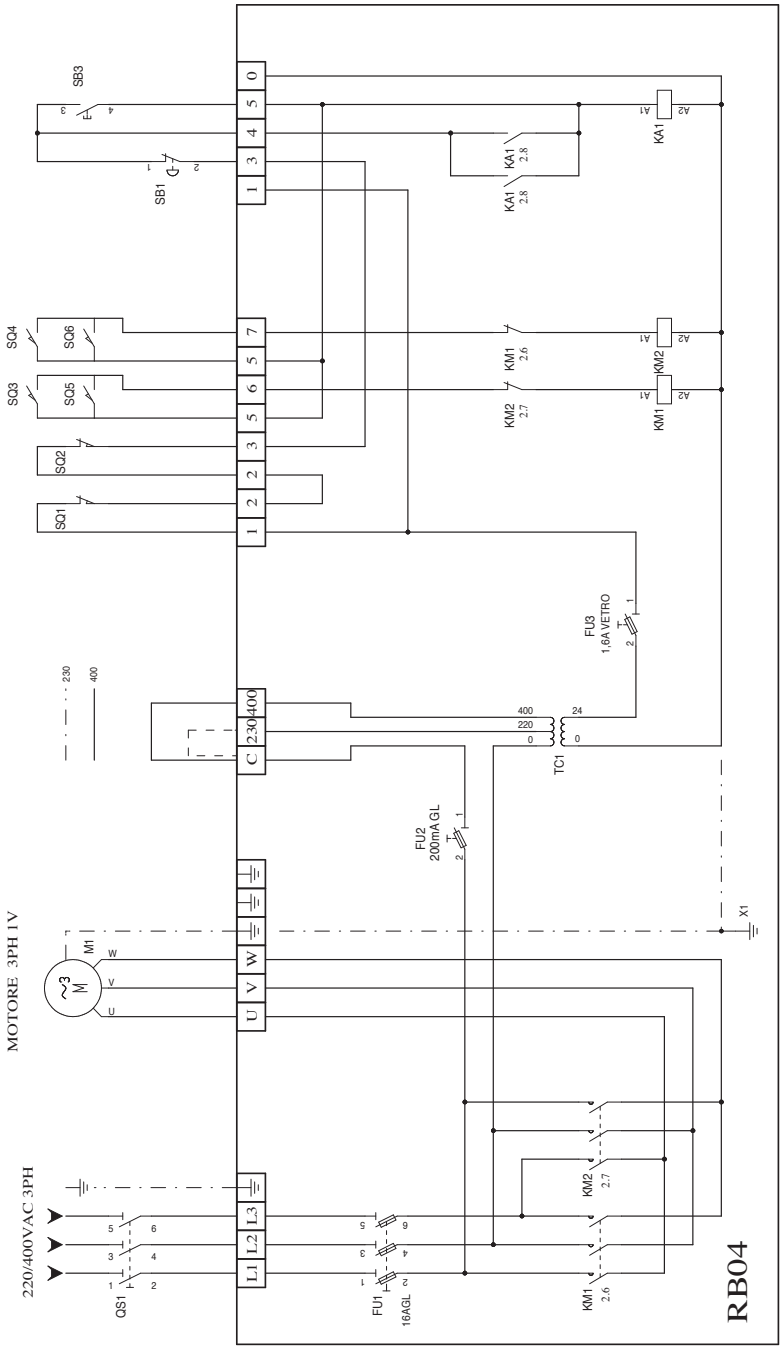

WIRING DIAGRAM

10. Wiring system

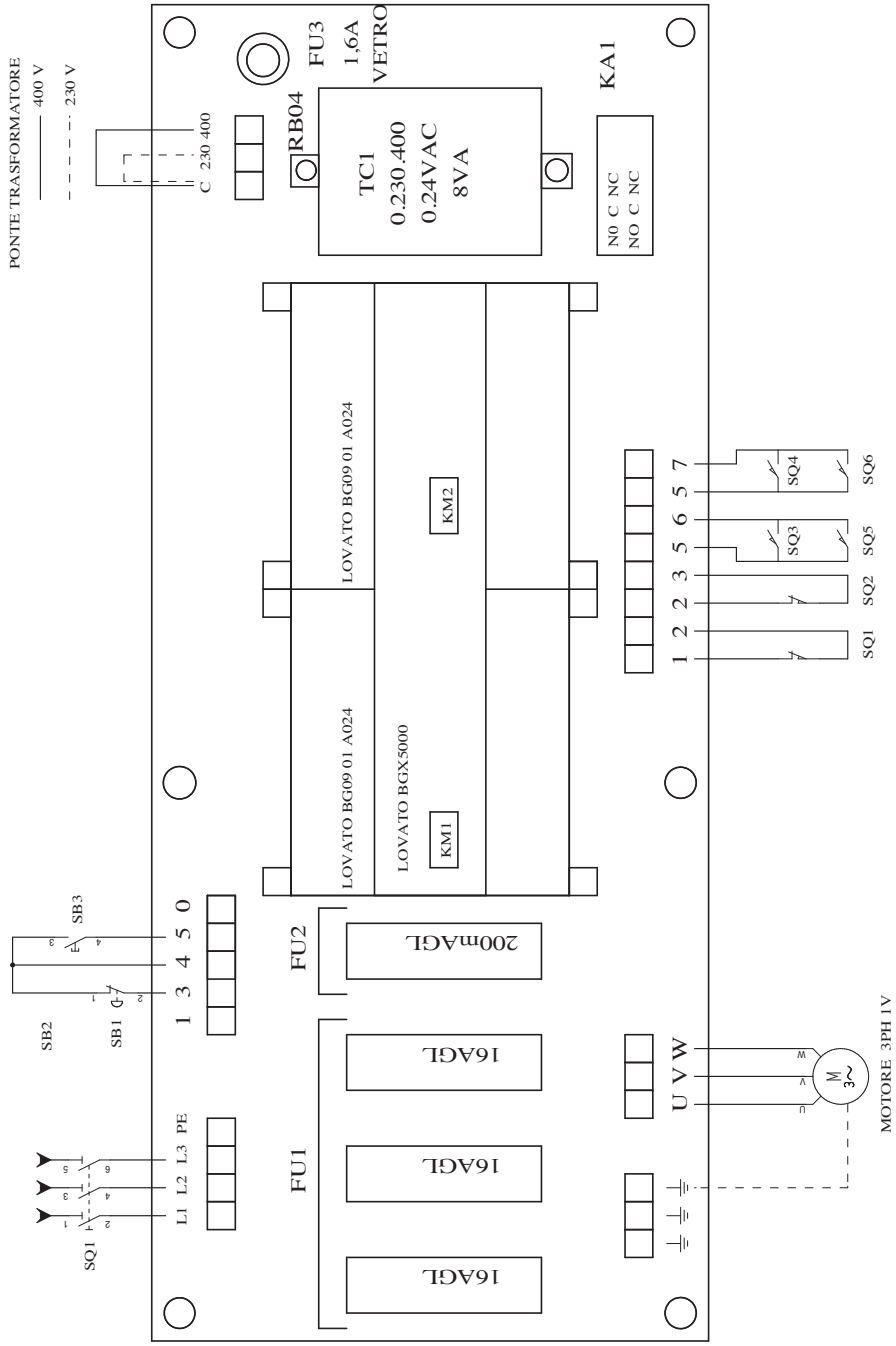

MADE IN ITALY